PURCHASED ITEMS

KEY	DESCRIPTION	QTY.	U/M	INV. CODE	VENDOR NAME	PART/MODEL NUMBER	PART TYPE
1	1/4"-20 HEX NUT SS W/PLASTIC	24	EA	B1	MISC	250-20_HEXNUT	PART
2	1/4"-20 X 1 1/2" STUD BOLT	24	EA	B1	MISC	1_4-20_STUD	PART

DROP IN TOP : 16 GA. STN/STL ALL WELDED CONSTRUCTION. CREASE DRAINBOARD 3/16"

SINK : 16 GA. STN/STL ALL WELDED CONSTRUCTION.
ALL HORIZONTAL AND VERTICAL CORNERS TO BE A 3/4" RADIUS.

NOTES:
ALL STN/STL TO BE TYPE 300 SERIES.
ALL STN/STL TO BE POLISHED TO A NO. 3 FINISH.
ALL UNEXPOSED WELDS TO BE COVERED w/ ALUMINUM PAINT.
ALL METAL EDGES AND CORNERS TO BE FILED SMOOTH.

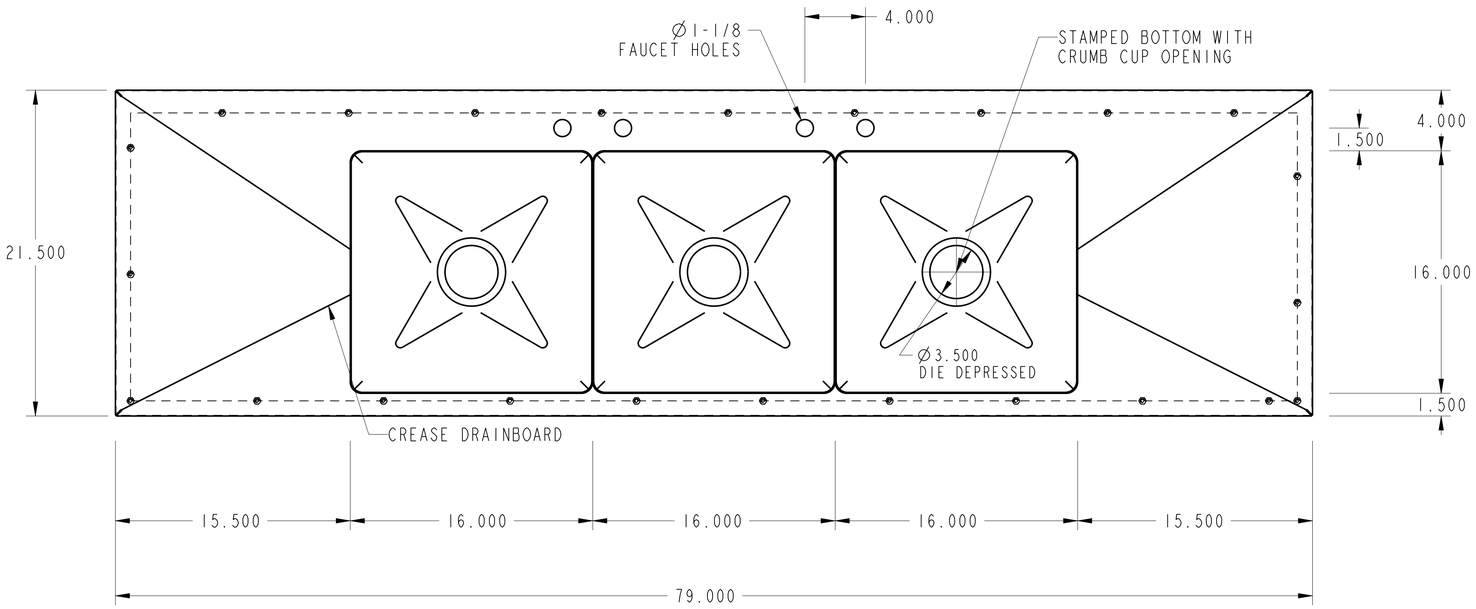

PLAN VIEW

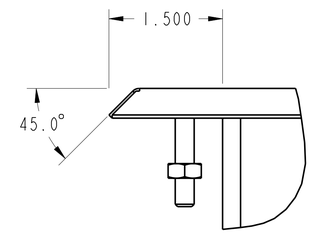

DETAIL A
SCALE 1.000

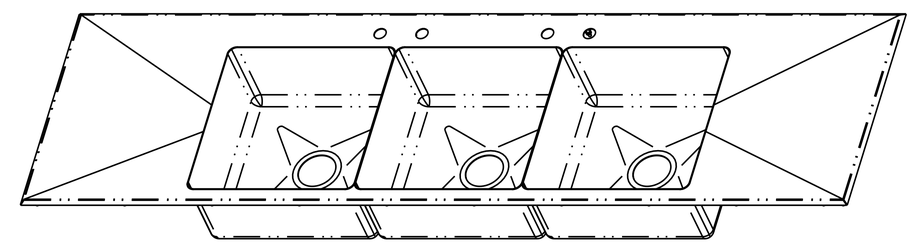

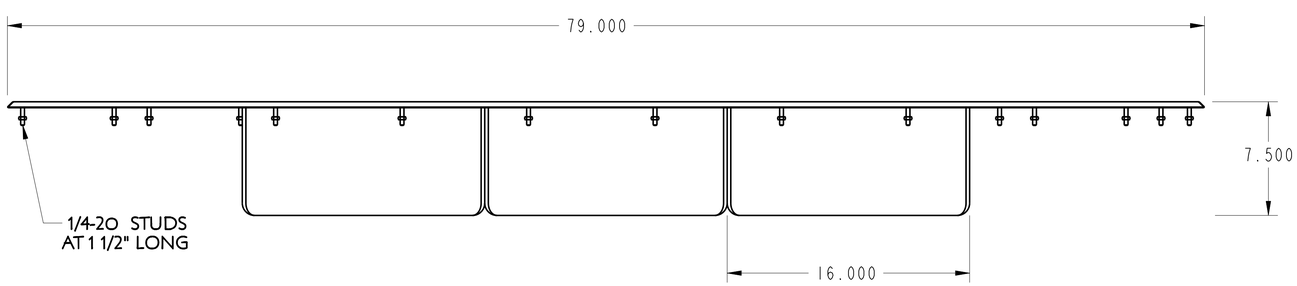

FRONT ELEVATION

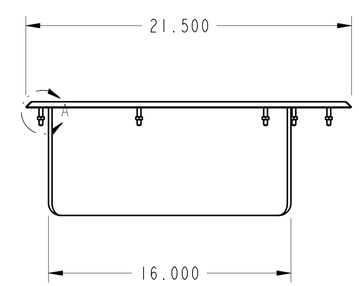

NO.	DATE		BY

REVISIONS

ASSEM	DWDD-3-1616-7_5-15_5D

NSF

PRO

THIS DRAWING IS THE PROPERTY OF AMTEKCO INDUSTRIES INC., AND IS TO REMAIN IN THE POSSESSION OF OUR REPRESENTATIVE UNLESS PERMISSION IS GIVEN BY AMTEKCO INDUSTRIES INC., AND MUST BE RETURNED WHEN REQUESTED.

AMTEKCO INDUSTRIES, INC.
MANUFACTURERS OF QUALITY PRODUCTS FOR
THE FOOD MARKETING INDUSTRY
1205 REFUGEE ROAD COLUMBUS,OHIO 43207
(614)228-6590 Fax (614)737-8016

AMTEKCO INDUSTRIES

THREE COMPARTMENT DROP IN SINK W/DRAIN BOARD (DWDD-3-1616-7.5-15.5D)

APPROVED BY	CKD BY	DATE	SCALE
		06-Oct-06	0.200
		DRAWN BY GANESH	1 of 1
DATE	CODE	DRAWING No. / REV. / PART/SHEET	
		DWDD-3-1616-7.5-15.5D	